0 600 842 103 / 403
Stand ~~09-04~~
Issue 01-06-19

Fig./Abb. 1

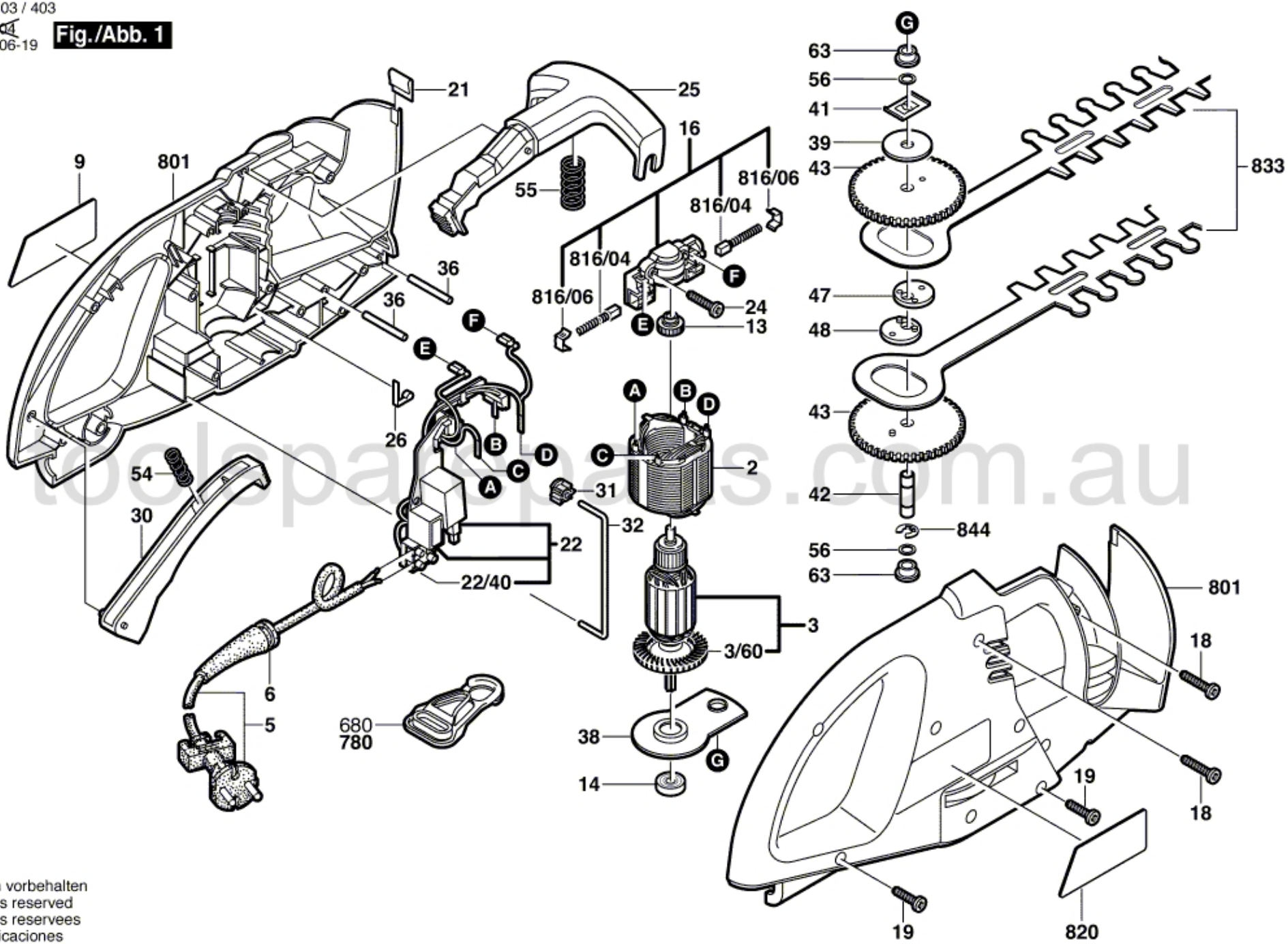

toolspareparts.com.au

Änderungen vorbehalten
Modifications reserved
Modifications reservees
Salvo modificaciones